In this folder there are several technical drawings.

The first drawing is a high speed steam engine - with 500 or more round per minute (RPM). The classical steam engines have cca 100 - 200 RPM.

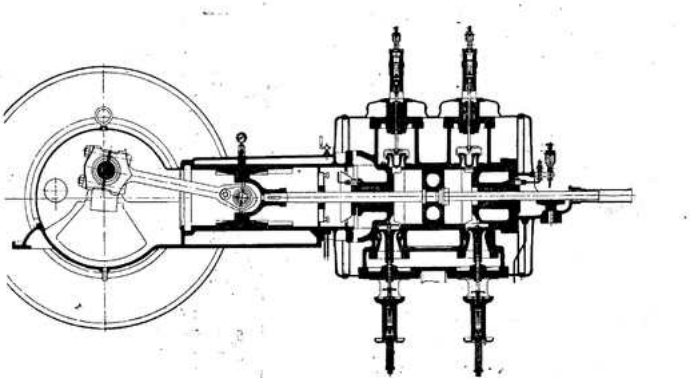

In the second drawing we can see a one casing steam turbine - only with a one rotor inside the case.

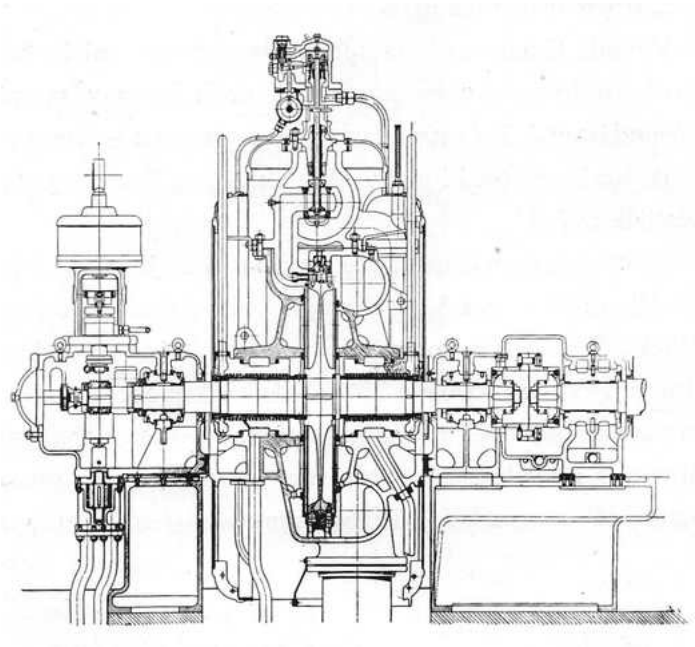

In the next drawing you can see a steam turbin with Curtiss wheel.

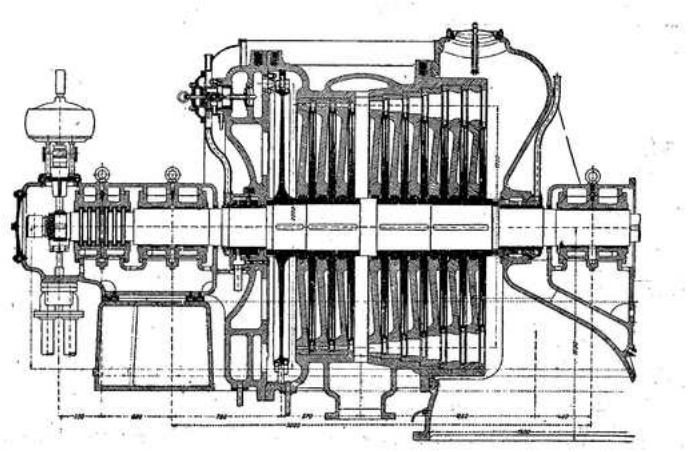

Here you can see a steam turbine with ten rotors. See below.

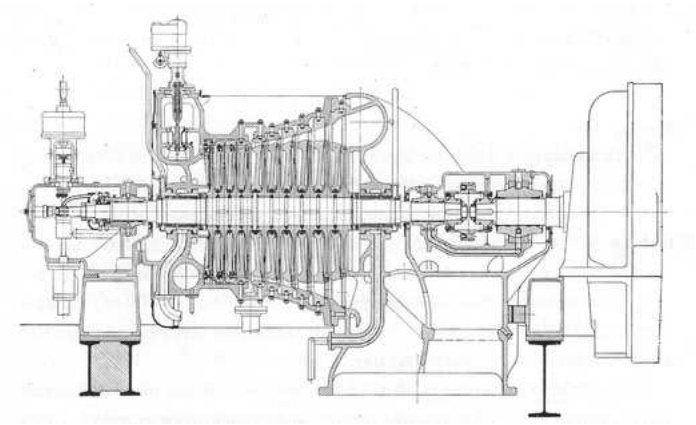

In the end you can see a two-casing turbine with a power of 11000HP

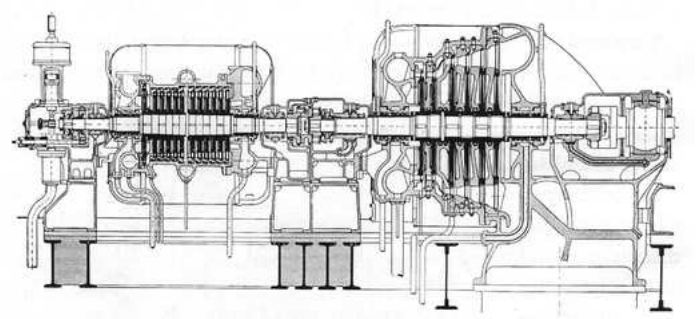

-

And the next drawing shows us a very simple machine - the Otto engine.

The source of a heat is a mixture of gas with the air.

Of´course after when the mixture is flammed. That´s a big different in front of steam engines, where the source of energy (called a boiler) is outside of cylinder.

And here you can see a engine with inside combusting. The Otto engine.

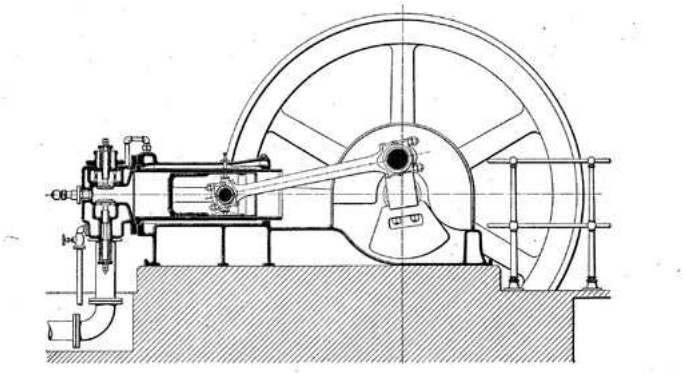

And here you can see an engine of a big inventor - Mr. Benz.

Two stroke engine. For example such kinds of engines were used in motocycles named JAWA (from Czechoslowakia).

The fuel is a petrol.

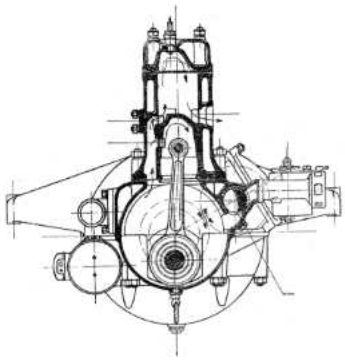

And below you can see the two stroke engine, but the fuel is an oil. The inventor of the engine is Mr. Diesel (from Germany).

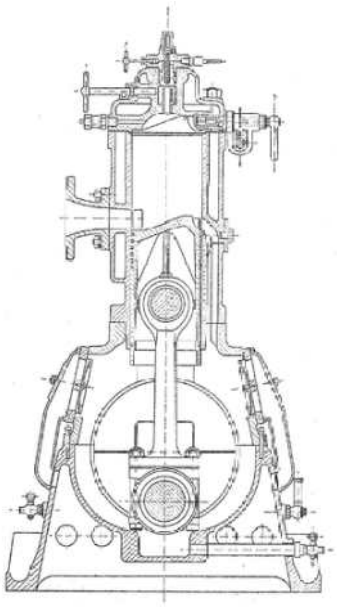
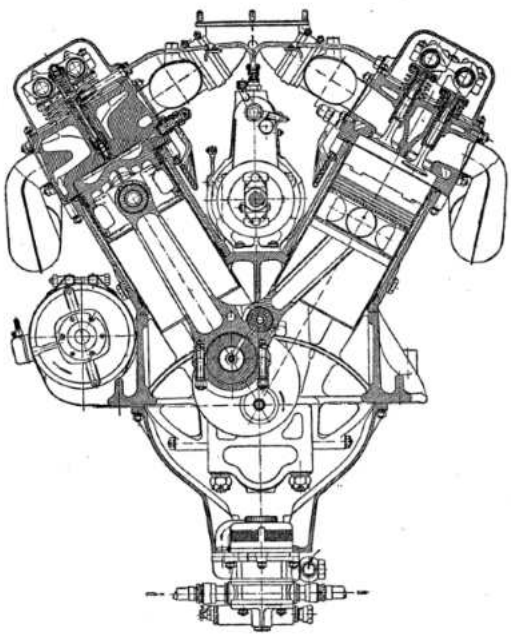
In the end is the drawing with a classical four-stroke Diesel engine.